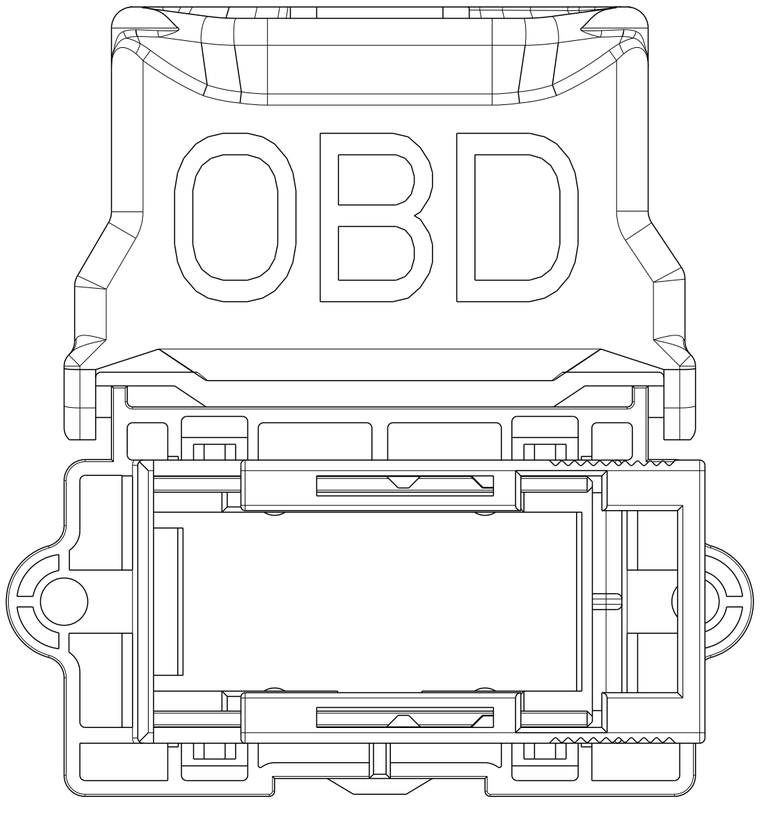

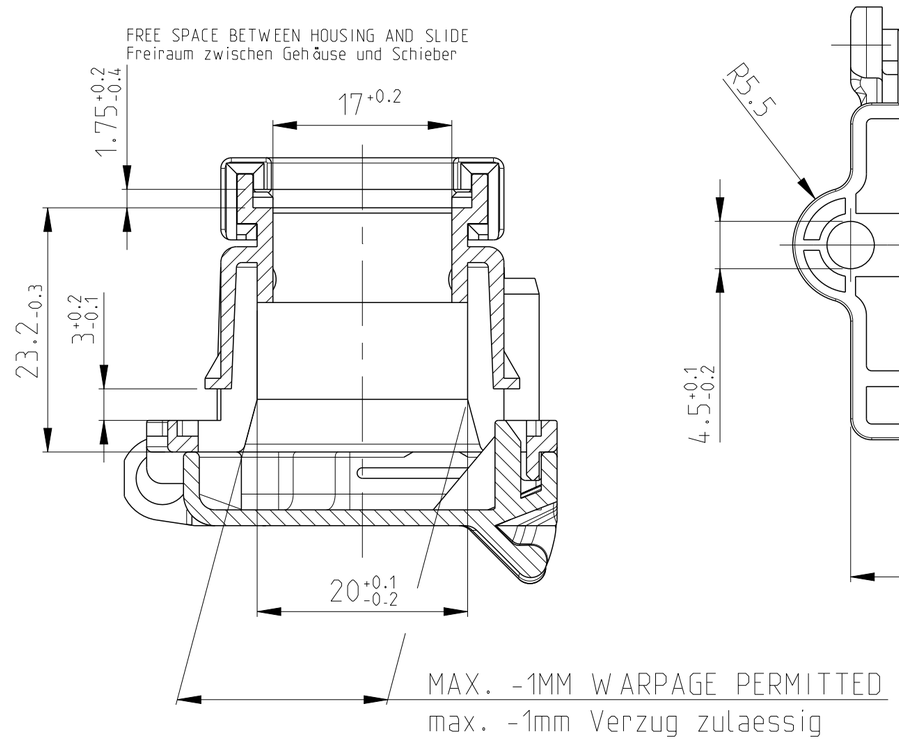

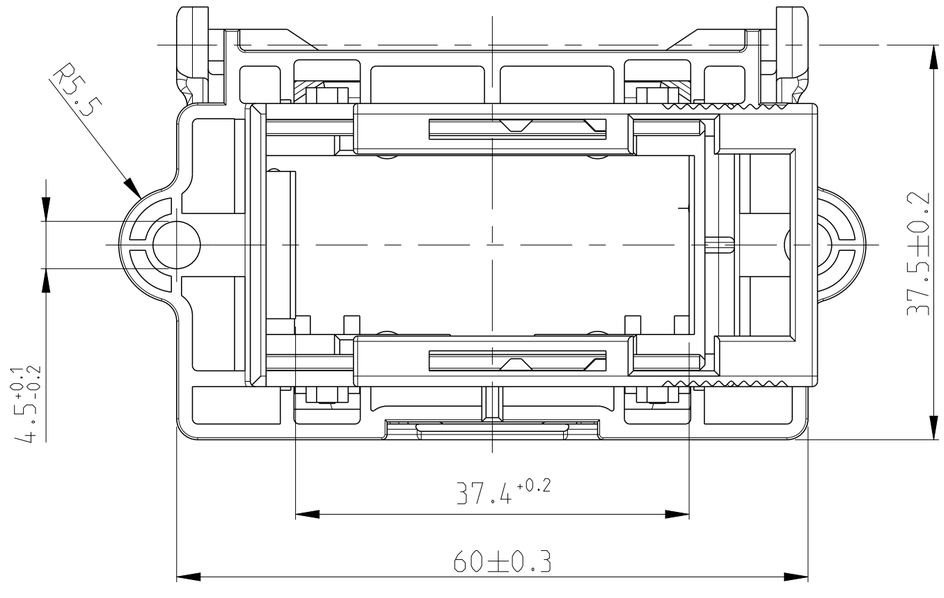

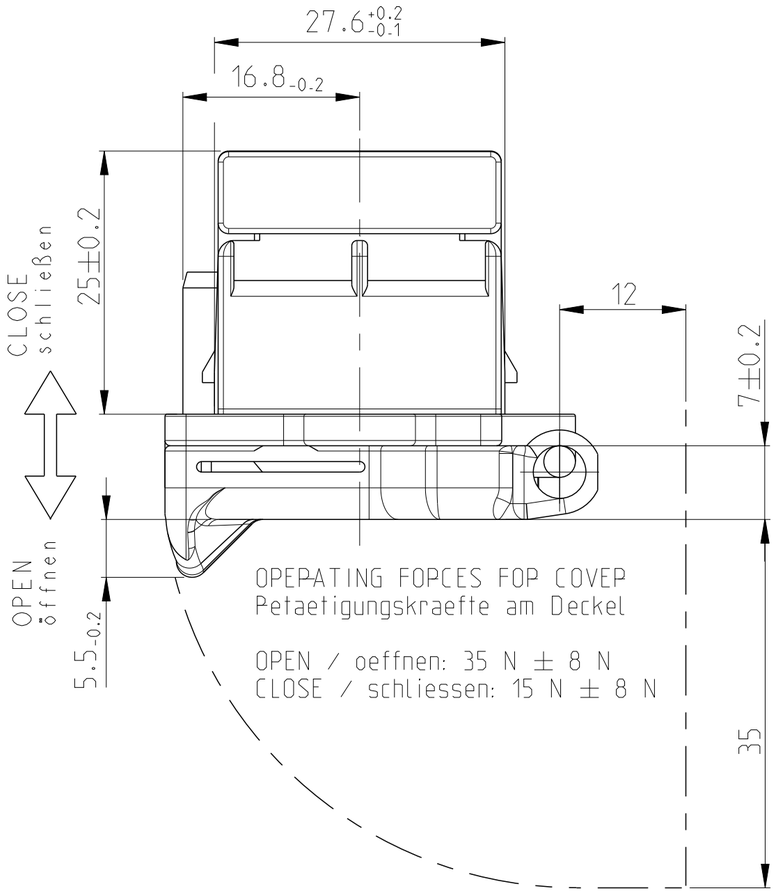

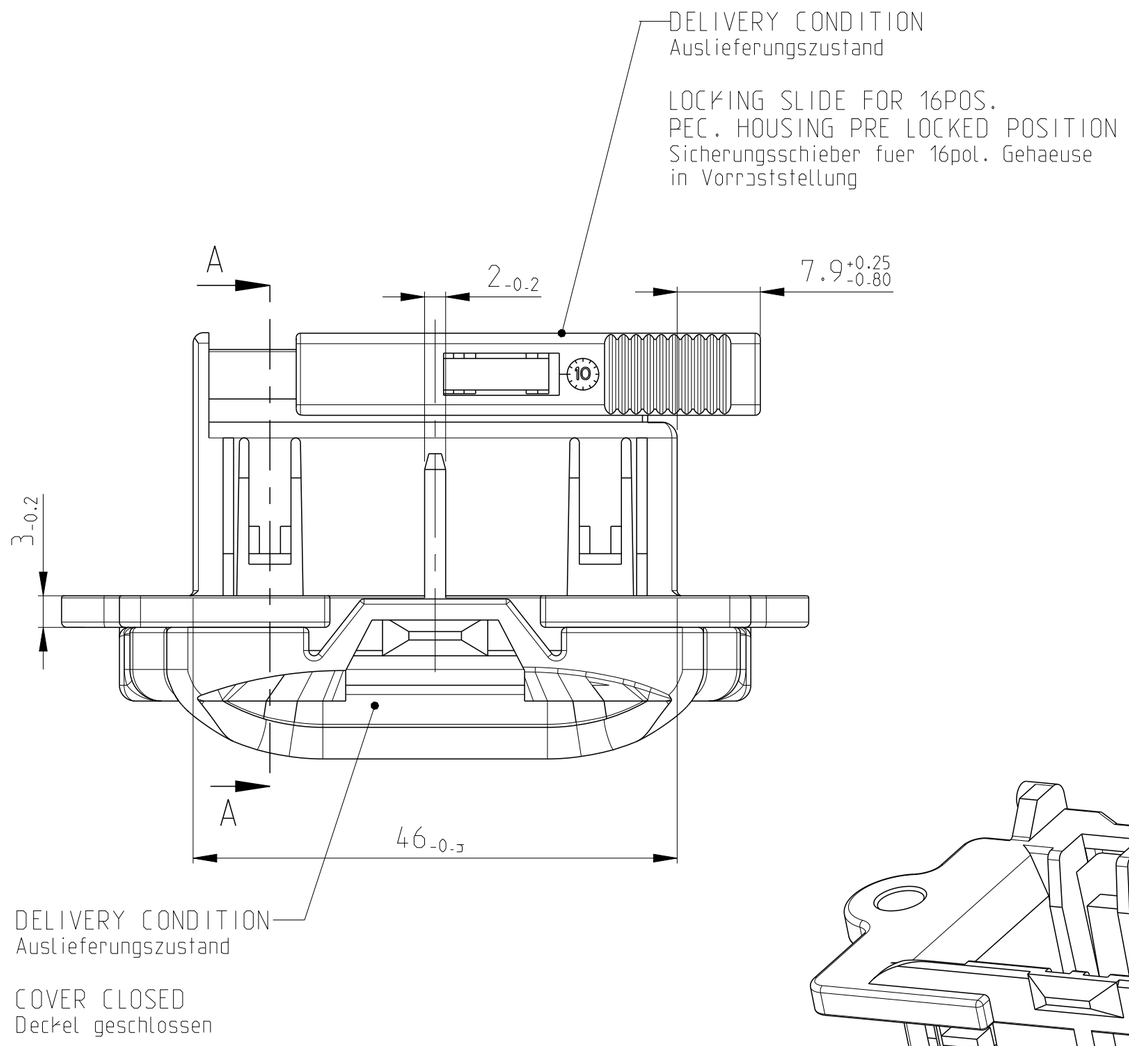

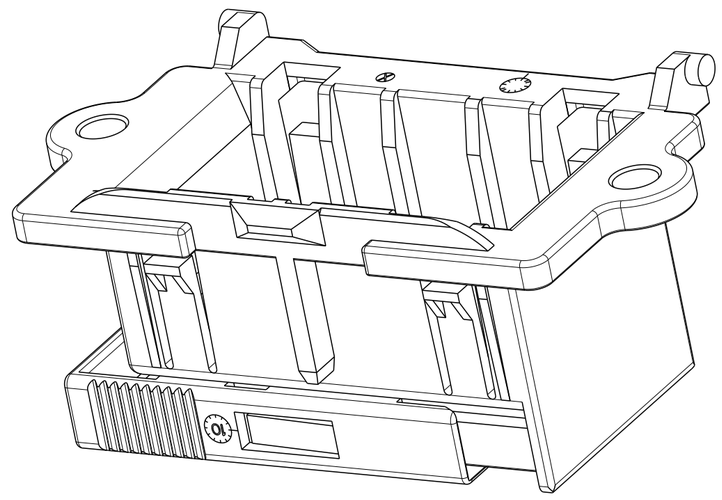

PANEL CUT OUT
Blechausschnitt

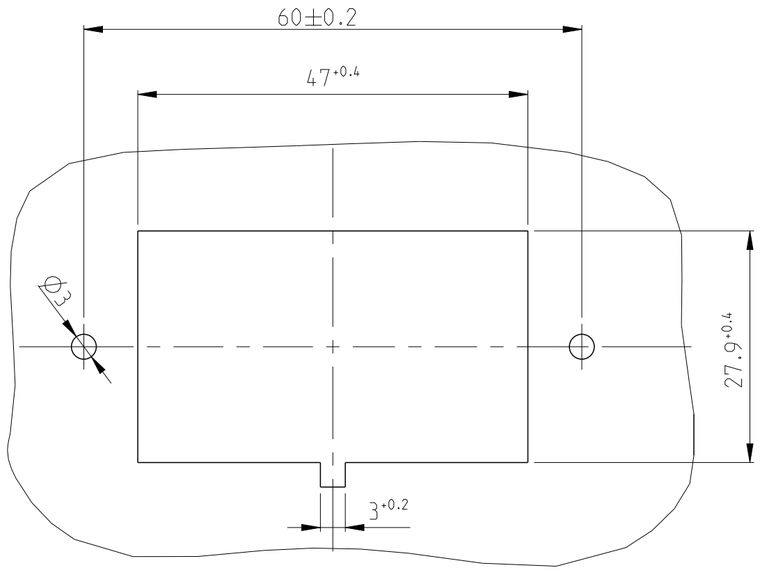
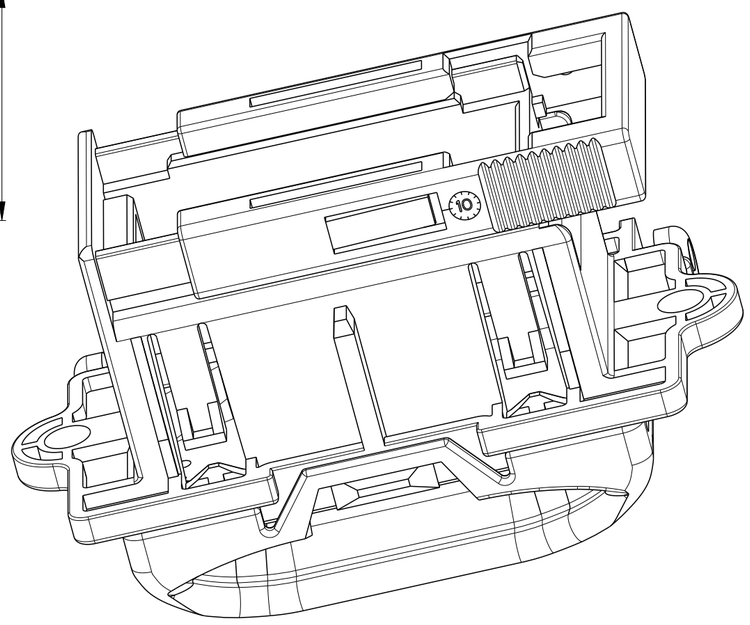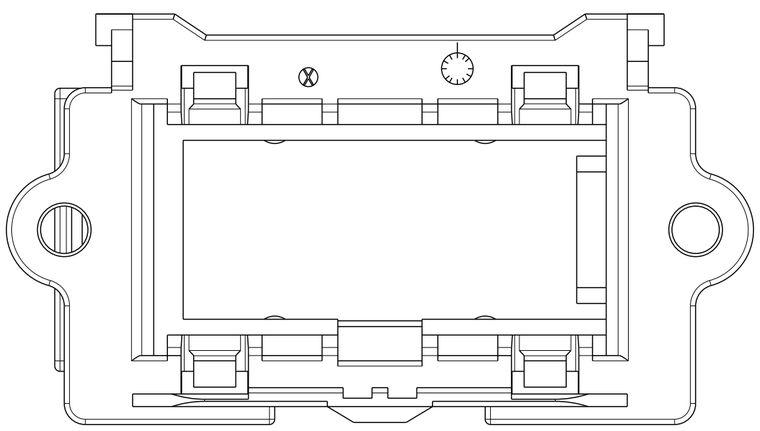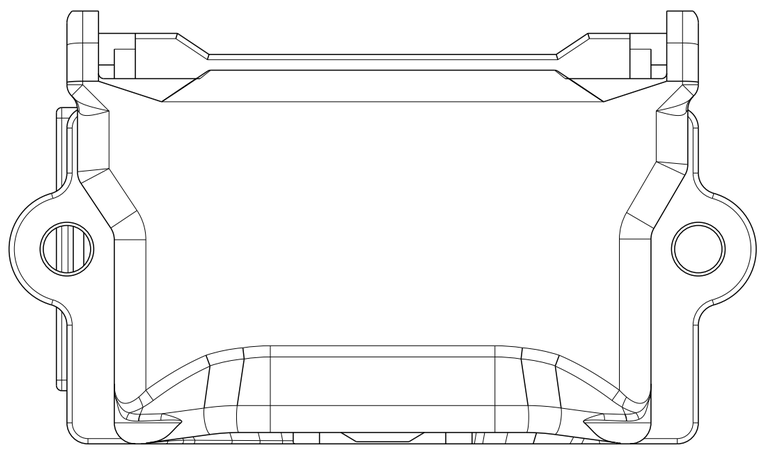
MATERIALTHICKNESS t=2.5+0.2mm
Materialdicke t=2.5+0.2mm